# Sundry Snippets 18 . . . The biggest Turntable ever

The 'museum' locomotive collection having reached 50, and the new replacement station (*Castlebrook*) for the ageing *Bottom End* having been completed and 'blooded' at Munich and Bremen, I wanted a new project to satisfy a very demanding, but 'crafty with it', Editor who was giving me prods from that land in the North.

I have often thought that a fiddle siding/turntable which didn't require you to walk the length of the layout to operate would be nice. Chatting to Tim Watson at Bremen recently I was told that Peter Denny did *that* years ago! This shows there is nothing new in the world, and that it *can* be done.

My current exhibition spread covers 35 ft., with a station at each end and a run of countryside in between. The idea was that where space is short, I could split the centre countryside and put the 'remote control' turntable on the end, thus reducing 35 ft. to about 20 fThe loom would carry 16 volts a.c. for two point motors, 12 volts d.c. for the track current, 12 volts d.c. for the locking bolt, deck drive motors and indicator lights. It would be coiled up and clipped to the turntable for transporting. A small 9-pin plug supplying the required inputs to the panel would plug into the main baseboard next to the inputs from the transformer.

The turntable would have five tracks, so it could be loaded with five 'standard' loco + 5-coach trains to be driven on and off or reversed in any order required.

**The Baseboard and Turntable**

The frame, 3ft. 6in. x 2ft., was salvaged from scrapped layouts, and a disc of 10in. diameter was cut to provide a centre pivot for rotation, and I made a base for ten slip rings, cut from sheet brass, to take current via wiper brushes from the frame to the table (*Photo 2*).

Around that, an aluminium angle frame with adjustable height rollers was araldited in place to support the table (see *Figure 1* and *Photo 3*). It was to be driven by rubber 'friction wheels', under the table, driving the centre pivot, as the torque required would be massive with the loading of the table changing all the time. A pair of geared-down, rubber, drive-wheels were arranged to 'press' together either side of the metal ring screwed to the base of the table.

After a fair amount of time adjusting the rollers, I found this worked very well – that is, until any weight, i.e. a train, was put on the table. It then slipped, and no amount of pressure applied on the drive wheels produced results. I removed the metal drive ring and re-designed the drive motor to press upwards under the table (see *Figure 2* and *Photo 3*) , but it soon became clear that one drive motor was not enough. So two were built – and then four!

After a while, the penny dropped that the rollers were lifting the table off the drive-wheels, however fine the adjustment, so - rip out the rollers and space the drive wheel motors at 12, 3, 6 and 9 o'clock, and make *them* height-adjustable to balance the entire weight of the table on the four drive motors. This time, as more trains were put on the table the weight on the drive motors increased, and it worked a treat. Yes, of course it is obvious, *now*!

The drive for the table has been mentioned, but how do you . . .

a) Stop it?
b) Lock it?
c) Get power to it?
d) Reverse the polarity on the five tracks?
e) Stop the train in the right place (it is 15 feet away!)?
f) *Not* drive the train while the table is moving?
g) Know which end is facing you?
h) Line up the wipers with the slip rings?
i) Get a double track – one of them mixed gauge – to fan out to five tracks on the deck?
j) Ascertain how many wires are required in the loom, which is about 12ft. long?

Who says railway modelling is not fun?

**Stopping and Locking the Table**

From experience seeking *total* reliability, I know that multi-position stops always go out of adjustment, so all my tables now travel 180° on to a fixed, rigid stop and then back again. When they reach the stop, the driving wheels slip, so you cut the current. Since the drive wheel is at the edge of the deck, it stays put.

However, in the case of this large, heavy table with varying loads, a more positive lock was required to maintain the height of the rails as well as their line-up. After many experiments, the mechanism in *Figure 3, Photo 5*, was evolved. It comprises a long tapered bolt with a brass gear 'rack' soldered on top, running in bearings, and driven by speed-adjustable, reversible motor. There is a micro-switch at both ends of the travel to cut the power supply, and one more micro-switch at the rear of the bolt which prevents any chance of track current reaching the rails during rotation of the table. On 12 volts, the geared-down bolt still whacks in with a thump - which damages the spur reduction gears. So, an old aircraft 'dimmer' switch slows it down a bit.

I have found that on a portable layout any form of mechanism for operating turntables, sector plates, traversers, or what have you, which involves lining up and *maintaining* alignment in Scalefour, will cause trouble after a bumpy car ride or a change of temperature.

## Adjustments

These involved a) the drive motors (see *Figure 2, Photo 6*), b) the support rollers (see *Figure 1*).
The drawings in Figures 1 and 2 (see next page) show the ones relevant to this article, and a locomotive turntable with screw adjustment was mentioned in *Scalefour News 123* for July 2001.

I know the support rollers have been discarded, but because the locking bolt is located on only one side of the table, I mounted one support roller on the opposite side, to balance the table.

## Getting the power to it

The method of feeding power to the conventional turntable, with the two half-circle rails and pick-ups at
the ends of the turntable deck, which keep the polarity matching the rest of the layout is well-known and accepted, but this deck has five tracks and, as *Photo 4* shows, there are ten slip rings to to produce the same effect. There would have been wipers under the deck, and the feed would have been through the safety switch at the rear of the locking bolt to the five section switches, via the wipers and the slip rings to the deck tracks. Well, that was the Plan!

Having laid the slip rings, I left the connection till last, while I completed the rest of the project, fine-tuning drive motors, track heights, indicator lights, and attaching the wiring loom to the portable panel (*photo 1* again). So, jumping ahead a bit - the table works, the tracks line up, the locking bolt and indicator lights work, and coaches run on and off all five roads: the track current is next!

## Other Ways Around

Anyway, forget the wipers *and* the slip rings. Make a hollow drive spindle and feed six wires through, five positive and one common earth (*Photos 2, 3 and 4*). Take the positive feed to the five section switches and the combined negative earth to a double pole change-over switch on the mini panel. Now colour-code the table deck - green one end and red the other - and swap the change-over switch to suit. But hang on, it is remote control and 15 feet away - you cannot *see* which end is where!

Another micro-switch was fitted, to be operated by the deck reaching its stops. This gives a little red or green light above the table and so can be seen from the operating end. So, the change-over switch is painted red and green and switched to match the coloured lights. Another, minor, point of confusion is that, when operating on the green, the sections go from 1 - 5 left to right, while on the red they go from 5 - 1 . . . oops; you just have to concentrate.

## Stopping the Trains

As I said in previous the paragraphs, the trains are 15 feet away, and we need to stop them just *short* of the the buffers. If they were touching the buffers, or any other device - a micro-switch or whatever - as soon as the table starts to rotate, the engine will get hoiked off the track.

A whole lot of crazy ideas were examined on this for a several days and probably the daftest one of the lot was used. I thought that if you put a light between the rails near the end, as the train approached it would cover the light, and you would stop the train. The problem there was that I would have to get two more wires through the hollow drive spindle, and there was not room. Nor did I want five bulbs at each end.

So, as *Photos 3 and 9* show, the five bulbs were mounted *under* the table, and five holes were bored between the rails at both ends of the deck. As the deck reached the stops, the holes now came to rest over the bulbs, but . . . they were now too low to throw much light. In the end, I fitted small reflectors of polished nickel-silver sheet at the back of each hole, angling it upwards to a mirror over the buffer stops (*Photo 10).* The loco now just appears in the mirror as the light is covered, which means it is stopped about two inches from the end. Magic!

Will all this survive a car journey? There is an outing coming up, so we'll see. I certainly now know an awful lot of things *not* to do, but I don't think I will build another one!

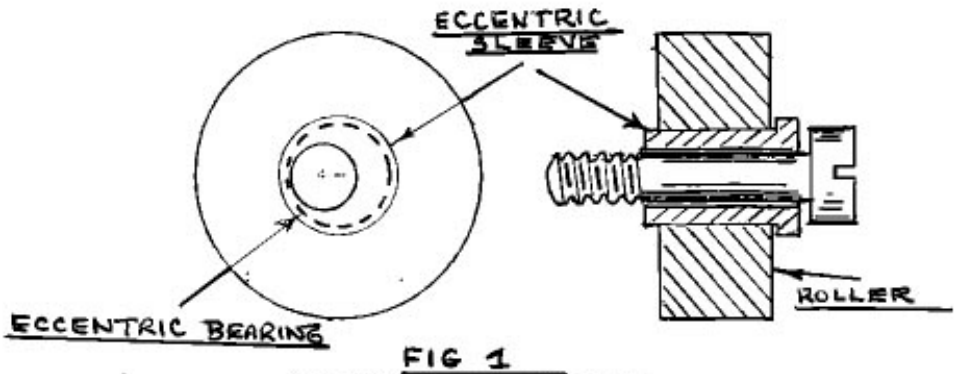


FIG 1
ADJUSTABLE ROLLER

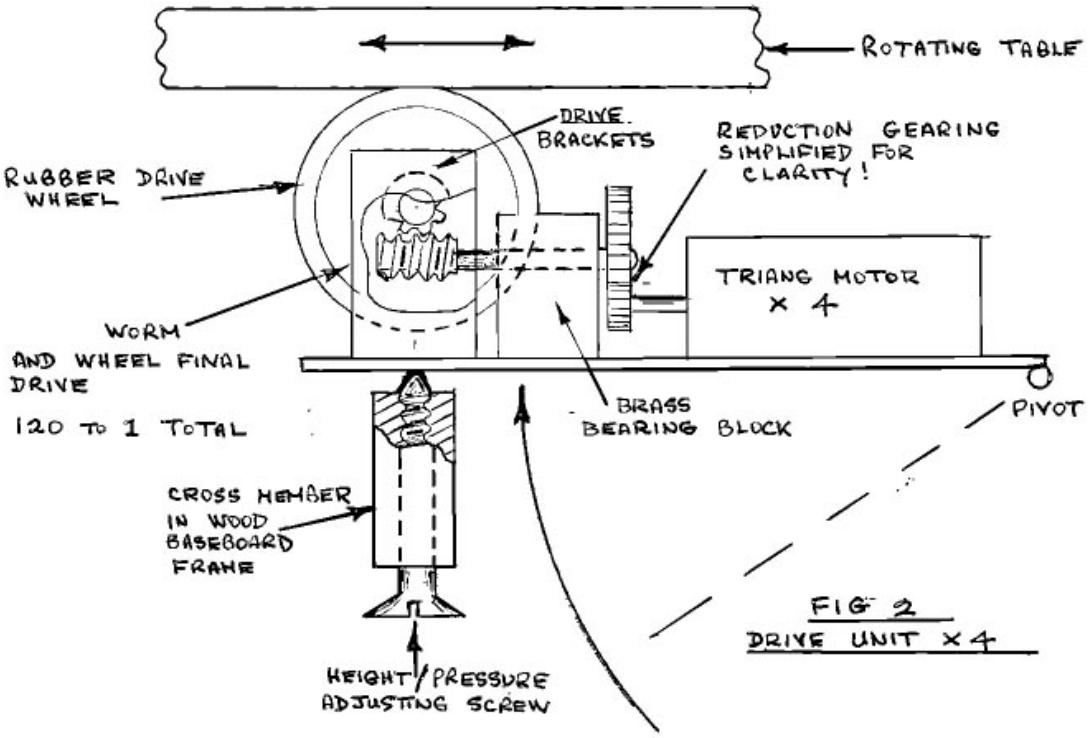


FIG 2
DRIVE UNIT × 4

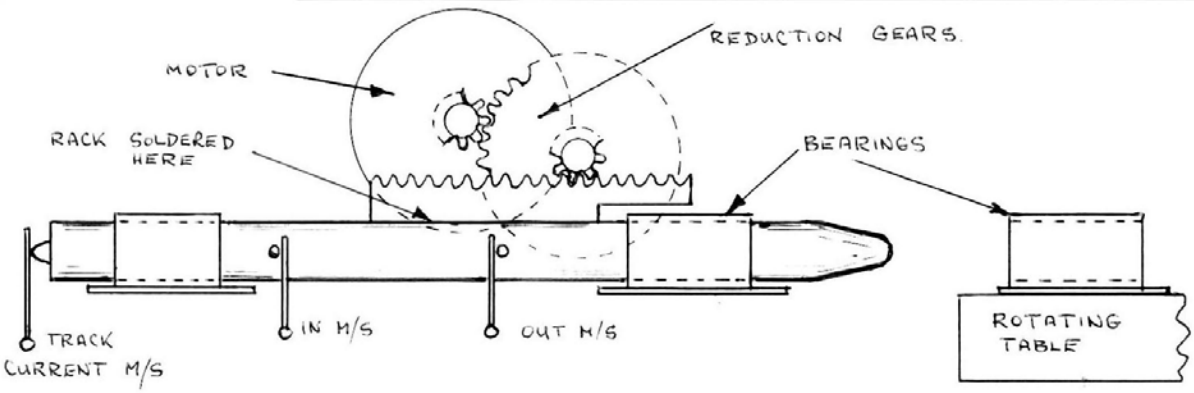


FIG 3
LOCKING BOLT